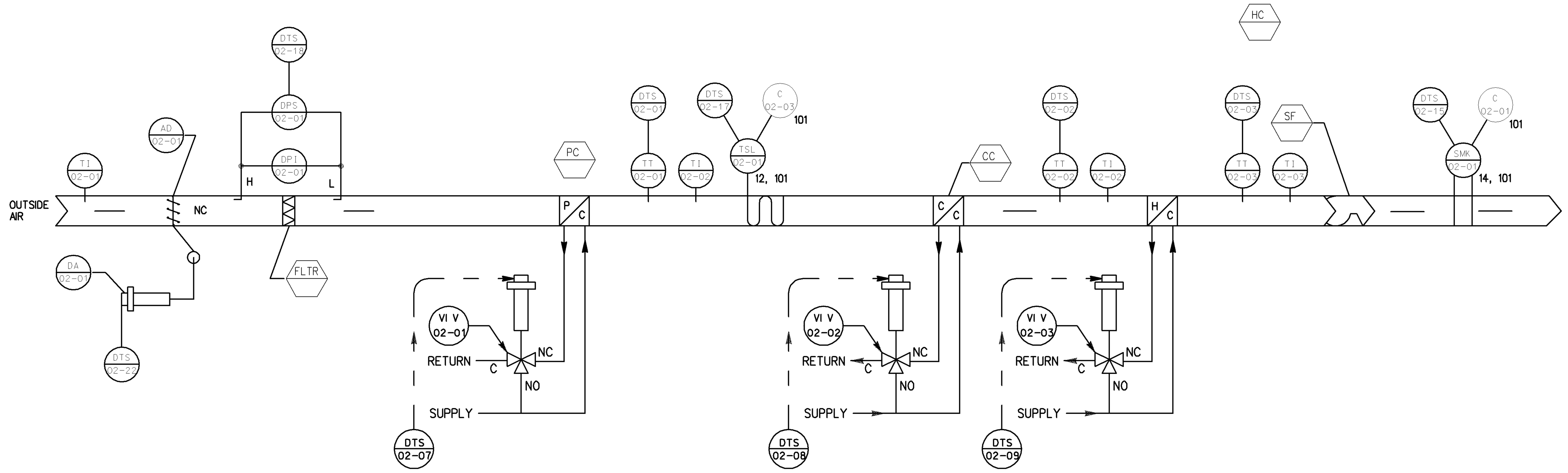

CONTROL SYSTEM SCHEMATIC

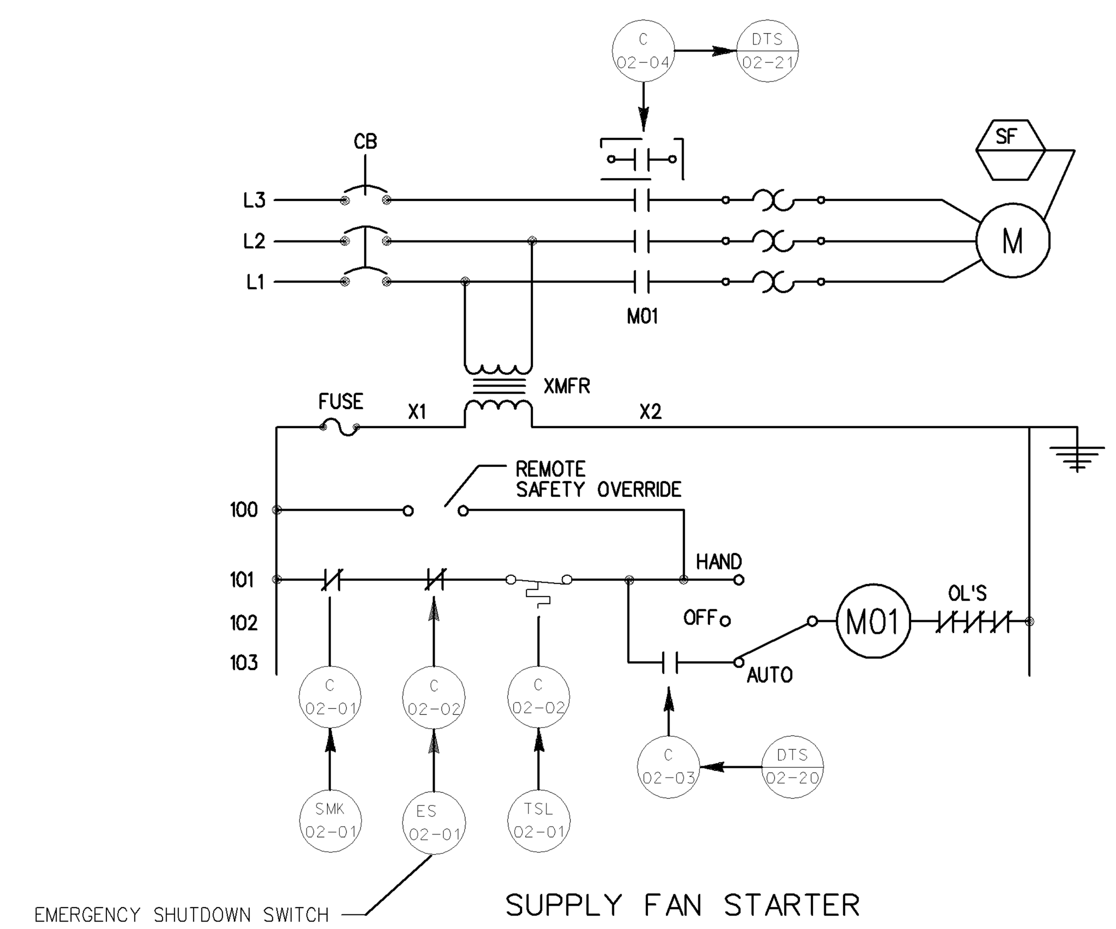

SUPPLY FAN STARTER

SEQUENCE OF OPERATION

OCCUPIED AND UNOCCUPIED MODES

IN THE UNOCCUPIED (OFF) MODE THE OUTSIDE AIR DAMPER SHALL BE CLOSED, THE SUPPLY FAN SHALL BE OFF AND ALL CONTROL VALVES SHALL BE IN THEIR NORMAL POSITIONS. IN THE OCCUPIED (OPERATING) MODE, THE OUTSIDE AIR DAMPER SHALL OPEN, THE SUPPLY FAN SHALL RUN AND ALL CONTROL VALVES SHALL BE UNDER CONTROL.

OUTSIDE AIR DAMPER

OCCUPIED MODE - THE OUTSIDE AIR DAMPER SHALL OPEN.

UNOCCUPIED MODE - THE OUTSIDE AIR DAMPER SHALL CLOSE.

SUPPLY FAN CONTROL

OCCUPIED MODE - THE SUPPLY FAN SHALL START AND SHALL OPERATE CONTINUOUSLY.

UNOCCUPIED MODE - THE SUPPLY FAN SHALL BE OFF.

FILTERS

DIFFERENTIAL PRESSURE SWITCHES ACROSS FILTER SHALL INITIATE A FILTER ALARM WHEN THE PRESSURE DROP ACROSS THE FILTER REACHES THE SETPOINT.

FAN INTERLOCKS

EF-1 & EF-2 SHALL BE INTERLOCKED WITH AHU-1 .

OUTSIDE AIR PREHEAT COIL CONTROL

ALL MODES - THE DDC SYSTEM SHALL MODULATE THE CONTROL VALVE FROM THE SIGNAL OF A TEMPERATURE SENSING ELEMENT AND TRANSMITTER IN THE COIL DISCHARGE AIR TO MAINTAIN THE SETPOINT.

FREEZE PROTECTION

ALL MODES - A FREEZESTAT, LOCATED AS SHOWN, SHALL STOP THE SUPPLY FAN, CAUSE THE OUTSIDE
AIR DAMPER TO CLOSE AND INITIATE A LOW TEMPERATURE ALARM IF THE TEMPERATURE DROPS BELOW THE FREEZESTAT'S SETPOINT. RETURN TO THE NORMAL MODE OF OPERATION SHALL REQUIRE MANUAL RESET AT THE FREEZESTAT. THE DDC PANEL SHALL MONITOR THE FREEZESTAT THROUGH AUXILIARY CONTACTS AND SHALL INDICATE AN ALARM CONDITION WHEN THE FREEZESTAT TRIPS.

COOLING COIL

ALL MODES - THE DDC SYSTEM SHALL MODULATE THE CONTROL VALVE FROM THE SIGNAL OF A TEMPERATURE SENSING ELEMENT AND TRANSMITTER IN THE COIL DISCHARGE AIR TO MAINTAIN THE SETPOINT.

REHEAT COIL

ALL MODES - THE DDC SYSTEM SHALL MODULATE THE CONTROL VALVE FROM THE SIGNAL OF A TEMPERATURE SENSING ELEMENT AND TRANSMITTER IN THE COIL DISCHARGE AIR TO MAINTAIN THE SETPOINT.

EMERGENCY FAN SHUTDOWN

ALL MODES - A SMOKE DETECTOR IN THE SUPPLY AIR DUCTWORK SHALL STOP THE SUPPLY FAN AND INITIATE A SMOKE ALARM IF SMOKE IS DETECTED.

AN EMERGENCY HVAC SYSTEM SHUTDOWN SWITCH SHALL BE PROVIDED AS SHOWN ON PLATE M-101 TO SHUT DOWN THE ENTIRE HVAC SYSTEM. EMERGENCY SWITCH SHALL BE A RED PUSH BUTTON TYPE LABELED "EMERGENCY VENTILATION SHUTDOWN". SWITCH SHALL BE ENCLOSED IN A TAMPER RESISTANT BUT ACCESSIBLE ENCLOSURE SUCH AS A "BREAK GLASS" TYPE ENCLOSURE. EMERGENCY SWITCH SHALL SHUT DOWN ALL FAN COIL UNITS, AHU-1 AND INTERLOCKED EXHAUST FANS. SWITCH SHALL ALSO CLOSE THE OUTSIDE AIR INTAKE DAMPER.

SENSOR SCHEDULE

IDENTIFIER	FUNCTION	RANGE
TT-02-01	PREHEAT TEMPERATURE TRANSMITTER	40 TO 140 DEG F
TT-02-02	DISCHARGE TEMPERATURE TRANSMITTER	40 TO 140 DEG F
TT-02-03	DISCHARGE TEMPERATURE TRANSMITTER	40 TO 140 DEG F

CONTROL VALVE SCHEDULE

IDENTIFIER	FUNCTION	TYPE	RANGE	Kv	CLOSE-OFF RATING	REMARKS
VLV-02-01	PREHEAT COIL VALVE	3-WAY, MODULATING	4 - 20 ma	2.5	36 PSI	
VLV-02-02	COOLING COIL VALVE	3-WAY, MODULATING	4 - 20 ma	11	33 PSI	
VLV-02-03	REHEAT COIL VALVE	3-WAY, MODULATING	4 - 20 ma	1.5	36 PSI	

CONTROL DAMPER SCHEDULE

IDENTIFIER	FUNCTION	TYPE	SIZE	RANGE	REMARKS
AD-02-01	OUTSIDE AIR	TWO-POSITION	14 X 14 (in)		PARALLEL BLADE

OPERATING PARAMETERS

FUNCTION	SETPOINT	REMARKS
PREHEAT COIL DISCHARGE	54 DEG F	
COOLING COIL DISCHARGE	55 DEG F	
REHEAT COIL DISCHARGE	68 DEG F	
FREEZESTAT	36 DEG F	
FILTER ALARMS	---------	PER FILTER MANUFACTURER'S RECOMMENDATIONS

DATA TERMINAL STRIP LAYOUT

	DEVICE NO.	DESCRIPTION	TYPE
1	TT-02-01	PREHEAT COIL DISCHARGE AIR	AI
2	TT-02-02	COOLING COIL DISCHARGE AIR	AI
3	TT-02-03	REHEAT COIL DISCHARGE AIR	AI
4			
5			
6			
7	VLV-02-01	PREHEAT COIL VALVE	AO
8	VLV-02-02	COOLING COIL VALVE	AO
9	VLV-02-03	REHEAT COIL VALVE	AO
10			
11			
12			
13			
14	ES-01-01	EMERGENCY SHUTDOWN SWITCH	DI
15	SMK-02-01	SUPPLY AIR SMOKE DETECTOR	DI
16			
17	TSL-02-01	FREEZESTAT	DI
18	DPS-02-01	FILTER	DI
19	C-02-03	SUPPLY-FAN START/STOP	DO
20	C-02-04	SUPPLY FAN STATUS	DI
21	EP-02-01	OUTSIDE-AIR DAMPER	DO
22			
23			
24			
25			

	HARDWARE – OUTPUT – DIGITAL: CONTROL RELAY	HARDWARE – OUTPUT – ANALOG: POSITION ADJUSTMENT	HARDWARE – INPUT – DIGITAL: AUXILIARY CONTACT	HARDWARE – INPUT – ANALOG: TEMPERATURE	HARDWARE – INPUT – ANALOG: % RELATIVE HUMIDITY	HARDWARE – INPUT – ANALOG: PSIG, PSIA, PSID	HARDWARE – INPUT – ANALOG: FLOW	SOFTWARE – ALARMS – DIGITAL: CONTACT CLOSURE	SOFTWARE – ALARMS – ANALOG: HIGH LIMIT	SOFTWARE – ALARMS – ANALOG: LOW LIMIT	SOFTWARE – ALARMS – ANALOG: RUN TIME	SOFTWARE – APPLICATION PROGRAMS: SCHEDULED START/STOP	OPTIMUM START/STOP	DUTY CYCLING	DEMAND LIMITING	DAY/NIGHT SETBACK	ECONOMIZER	VENTILATION/RECIRCULATION	FAILURE MODE **
SUPPLY FAN	1		1					X			X	X	X	X	X				
OUTSIDE AIR DAMPER	1																		
PREHEAT COIL DISCHARGE				1					X	X									
COOLING COIL DISCHARGE				1					X	X									
REHEAT COIL DISCHARGE				1					X	X									
PREHEAT COIL VALVE		1																	
COOLING COIL VALVE		1																	
REHEAT COIL VALVE		1																	
EMERGENCY SHUTDOWN			1					X											
SMOKE DETECTOR			1					X											
FREEZESTAT			1					X											
FILTER			1					X											

** C - LAST COMMAND O - ON (OPEN)
H - HIGH VALUE F - OFF (CLOSED)
L - LOW VALUE

US ARMY CORPS OF ENGINEERS SAVANNAH

SYMBOL	DESCRIPTION	DATE	BY

DESIGNED BY: REL | DATE: 25 JAN 2010
DWN BY: REL | CKD BY: TAM | SOLICITATION NO.: W912HN-09-R-0018
SUBMITTED BY: | CONTRACT NO.:
FILE NAME: BRHM-603 | CATEGORY CODE: 730-46-01
SIZE: 34x22 | PLOT SCALE: 1:1 | PLOT DATE:

U. S. ARMY ENGINEER DISTRICT
CORPS OF ENGINEERS
SAVANNAH DISTRICT

LS3P ASSOCIATES LTD.
205 ½ KING STREET
CHARLESTON, SC, 29401

ALBRITTON JUNIOR HIGH SCHOOL ADDITION
FT BRAGG NORTH CAROLINA

HVAC CONTROLS AHU-1

PLATE REFERENCE NUMBER
MI603
SHEET 82