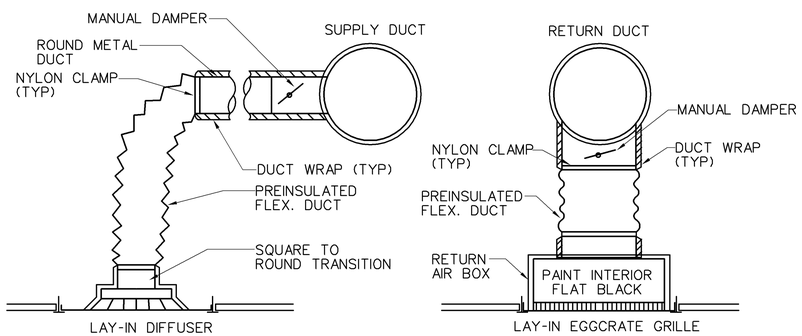

NOTE: INSTALL NYLON CLAMPS ON INNER FLEX DUCT LINER AND OUTER JACKET.
INSTALL MANUAL BALANCING DAMPER IN ALL BRANCH DUCTS.

1 M503 M503 SUPPLY AND RETURN AIR TAKE-OFF TO AIR TERMINAL DEVICE
NOT TO SCALE

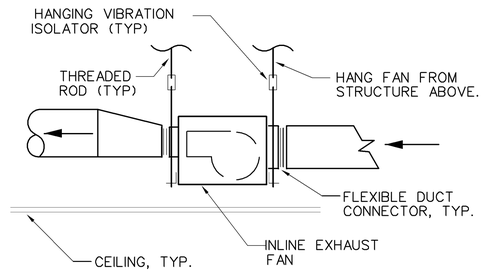

2 M503 M503 IN-LINE EXHAUST FAN DETAIL
NOT TO SCALE

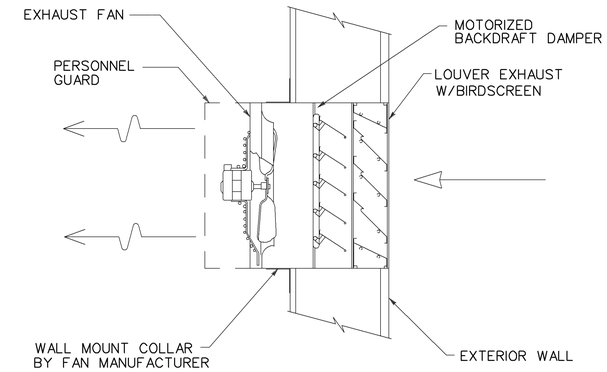

3 M503 M503 TYPICAL PROPELLER FAN DETAIL
NOT TO SCALE

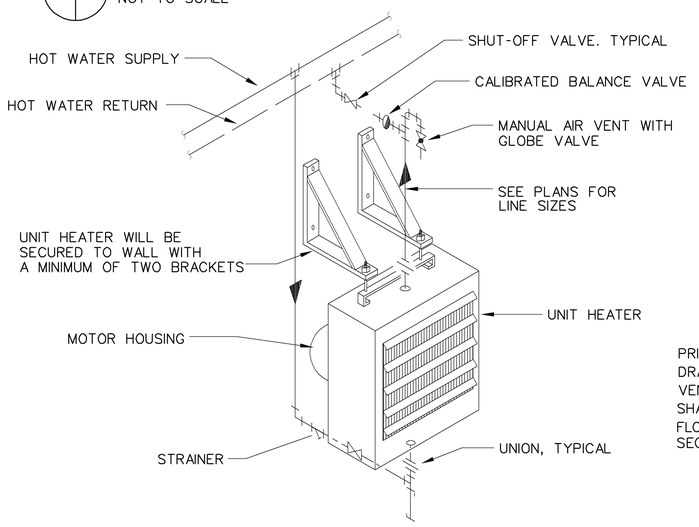

4 M503 M503 HOT WATER UNIT HEATER DETAIL
NOT TO SCALE

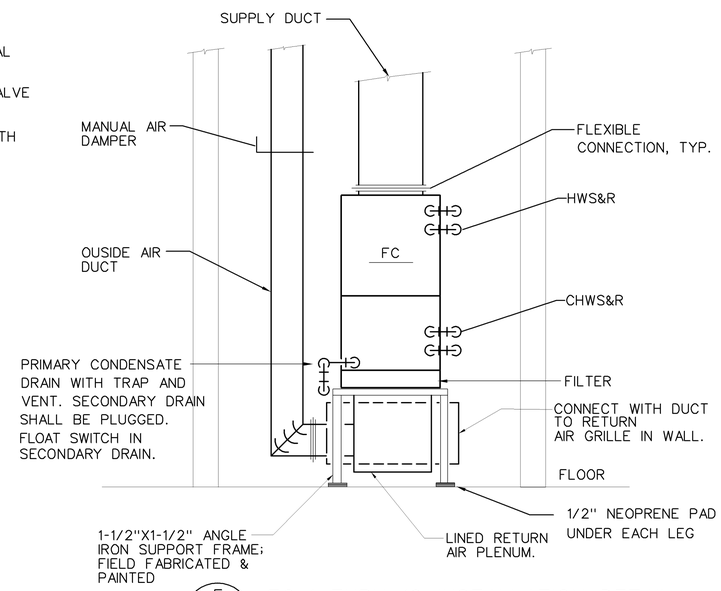

5 M503 M503 FC-1 THRU 10 INSTALLATION DETAIL
NOT TO SCALE

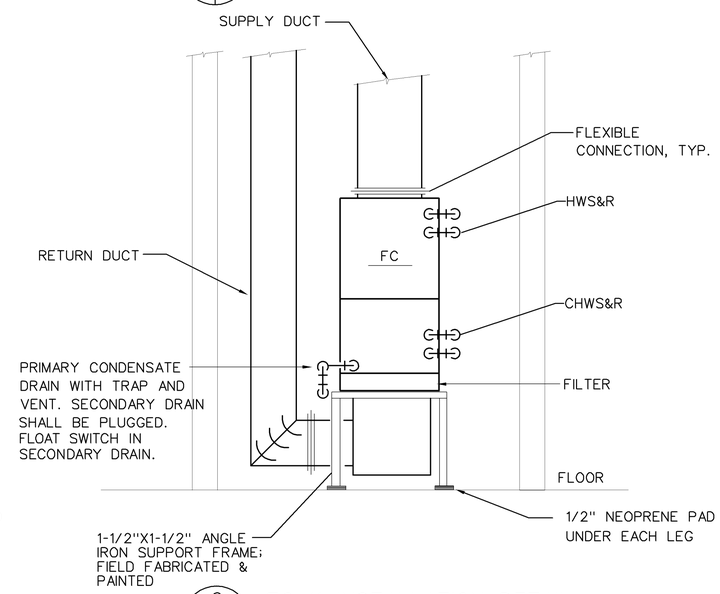

6 M503 M503 FC-11 INSTALLATION DETAIL
NOT TO SCALE

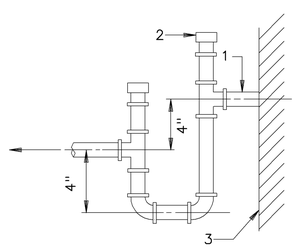

1. PIPE FULL SIZE OF AIR UNIT DRAIN CONNECTION (1" MINIMUM)
2. CAPS
3. AIR UNIT CASING

7 M503 M503 CONDENSATE DRAIN TRAP DETAIL
NOT TO SCALE

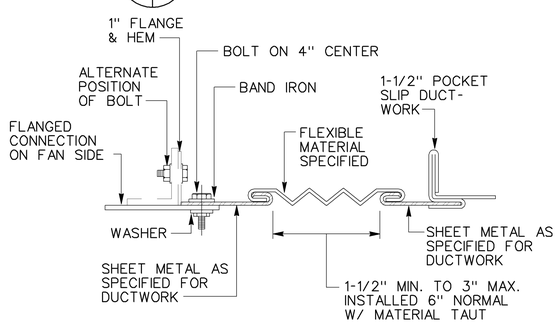

8 M503 M503 FLEXIBLE CONNECTOR
NOT TO SCALE

US ARMY CORPS OF ENGINEERS SAVANNAH

SYMBOL	DESCRIPTION	DATE	BY

DESIGNED BY: REL
DWN BY: REL
CKD BY: TAM
SUBMITTED BY:
DATE: 25 JAN 2010
SOLICITATION NO.: W912HN-09-R-0018
CONTRACT NO.:
CATEGORY CODE: 730-46-01
PLOT DATE:
FILE NAME: BRHM-503
PLOT SCALE: 1:1
SIZE: 24x22

U. S. ARMY ENGINEER DISTRICT
CORPS OF ENGINEERS
SAVANNAH DISTRICT

LS3P ASSOCIATES LTD.
205 ½ KING STREET
CHARLESTON, SC. 29401

ALBRITTON JUNIOR HIGH SCHOOL ADDITION
FT BRAGG NORTH CAROLINA

MECHANICAL DETAILS

PLATE REFERENCE NUMBER
M-503
SHEET 78