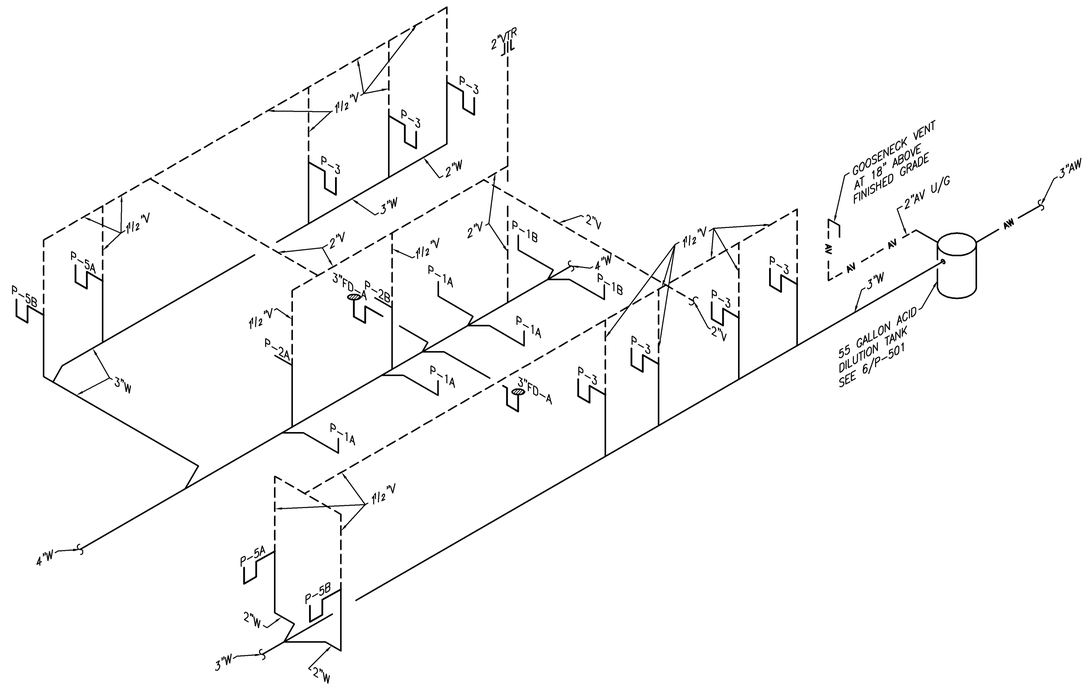

1 P601P601 DRAINAGE & VENT RISER DIAGRAM
SCHEMATIC ONLY

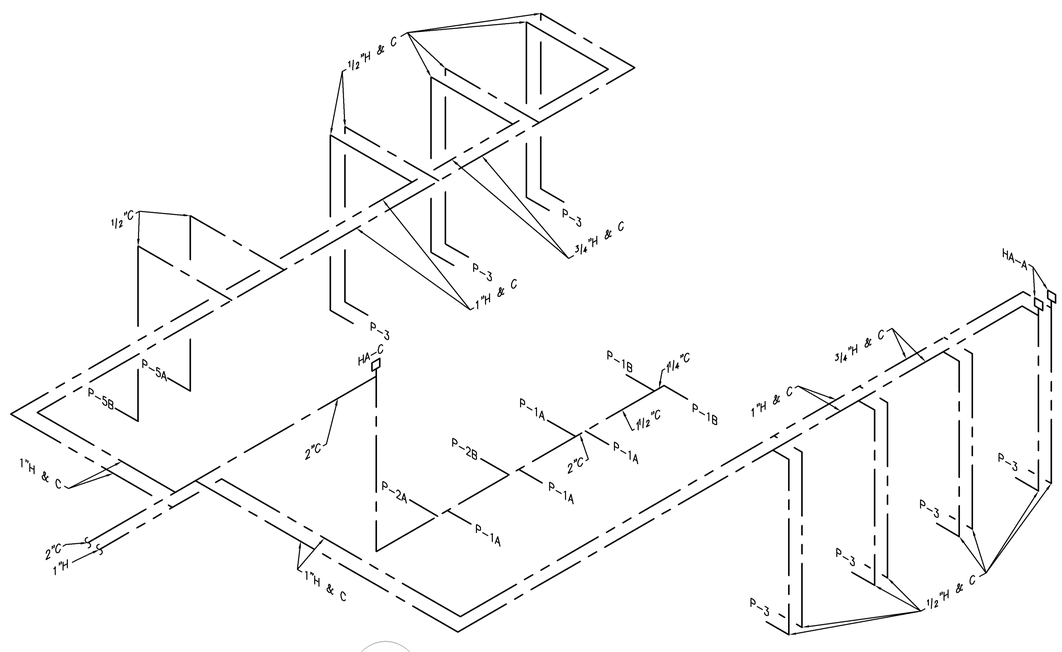

2 P601P601 HOT & COLD WATER RISER DIAGRAM
SCHEMATIC ONLY

US ARMY CORPS
OF ENGINEERS
SAVANNAH

SYMBOL	DESCRIPTION	DATE	BY

DESIGNED BY: JGB
DWN BY: JGB
CKD BY: CGS
SUBMITTED BY:
DATE: 25 JAN 2010
SOLICITATION NO.: W912HN-09-R-0018
CONTRACT NO.:
CATEGORY CODE: 730-46-01
FILE NAME: BRHP-601
SIZE: 24x22
PLOT SCALE: 1/8" = 1'-0"
PLOT DATE:

U. S. ARMY ENGINEER DISTRICT
CORPS OF ENGINEERS
SAVANNAH DISTRICT

LS3P ASSOCIATES LTD.
205 ½ KING STREET
CHARLESTON, SC. 29401

ALBRITTON JUNIOR HIGH SCHOOL ADDITION
FT BRAGG NORTH CAROLINA

PLUMBING RISER DIAGRAMS

PLATE REFERENCE NUMBER
P-601
SHEET 70