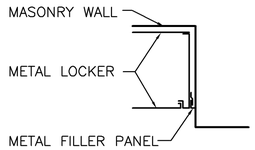

PLAN @ END

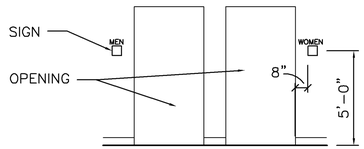

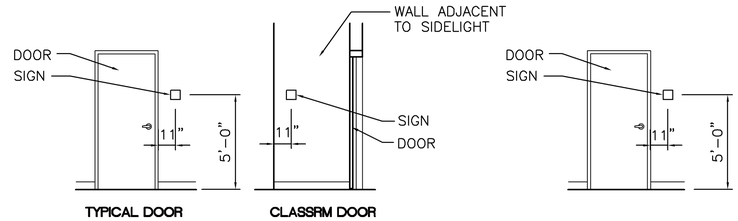

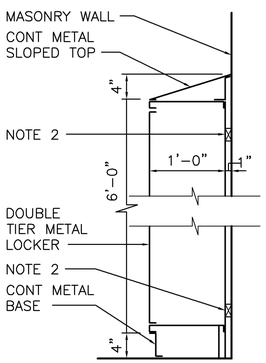

SECTION

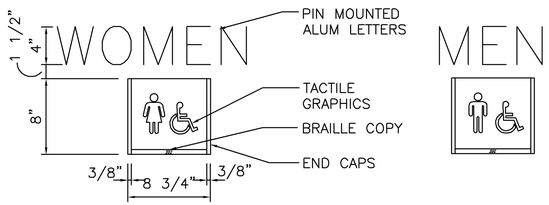

SIGN TYPE 1

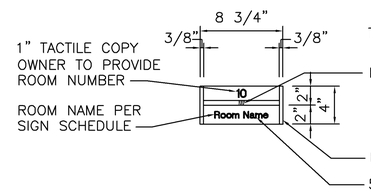

SIGN TYPE 2

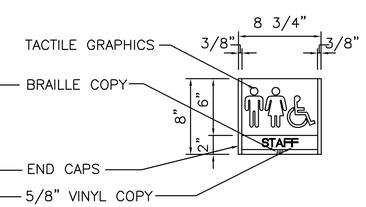

SIGN TYPE 3

D A703 A703 **INTERIOR SIGNAGE DETAILS** – PROVIDE WHITE GRAPHICS AND LETTERS ON DARK BLUE BACKGROUND (TO MATCH SCHOOL COLOR)
SCALE: NOT TO SCALE

INTERIOR SIGNAGE SCHEDULE

CONSTRUCTION DOOR NUMBER	CONSTRUCTION ROOM NUMBER	SIGNAGE NUMBER	SIGNAGE TEXT	SIGN TYPE (SEE D/A703)
---	102	---	MEN	TYPE 1
---	103	---	WOMEN	TYPE 1
105	105		JANITOR	TYPE 2
106	106	---	STAFF TOILET	TYPE 3
107	107		COMMUNICATION	TYPE 2
109	109		MECHANICAL	TYPE 2
110	110		MECHANICAL	TYPE 2
111	111		CLASSROOM	TYPE 2
112	112		CLASSROOM	TYPE 2
113	113		CLASSROOM	TYPE 2
114	114		CLASSROOM	TYPE 2
115	115		WORKROOM	TYPE 2
116	116		STORAGE	TYPE 2
117	117		PREP ROOM	TYPE 2
118A	118		CLASSROOM	TYPE 2
118B	118		CLASSROOM	TYPE 2
119	119		CLASSROOM	TYPE 2
122	122		MECHANICAL	TYPE 2
123	123		MECHANICAL	TYPE 2
124	124		SPECIAL PROJECTS	TYPE 2
125	125		STORAGE	TYPE 2
126A	126		CLASSROOM	TYPE 2
126B	126		CLASSROOM	TYPE 2

KEYED NOTES

1. ANCHOR SUPPORT BRACKETS TO MASONRY WALL WITH COUNTERSUNK FASTENERS.
2. PROVIDE CONTINUOUS PT WOOD BLOCKING ALONG TOP & BOTTOM OF LOCKERS. ANCHOR TO MASONRY WALL & EACH LOCKER.
3. FILL CELLS OF CMU SOLID WITH GROUT OR PROVIDE SOLID CMU TO MAINTAIN 1 HOUR FIRE RATING OF PARTITION. DASHED LINES INDICATE ALTERNATE COURSING.
4. SEE 400 SERIES PLANS & ELEVATIONS FOR INSTALLATION HEIGHT, LENGTH & LOCATION.
5. PLASTIC LAMINATE ON 3/4" PLYWOOD BASE. PROVIDE AT EXPOSED ENDS OF CABINETS. (COLOR TO MATCH WALL BASE).
6. TYPICAL COUNTERTOP SHOWN. PROVIDE 1" CHEMICAL RESISTANT RESIN COUNTERTOPS AT SCIENCE LAB AND PREPERATION ROOM.
7. OPEN WALL CABINET UNIT SHOWN. PROVIDE UNIT WITH DOORS WHERE INDICATED ON INTERIOR ELEVATIONS. SEE 400 SERIES DRAWINGS.

B A101 A703 **DOUBLE TIER LOCKERS**
SCALE: 1" = 1'-0"

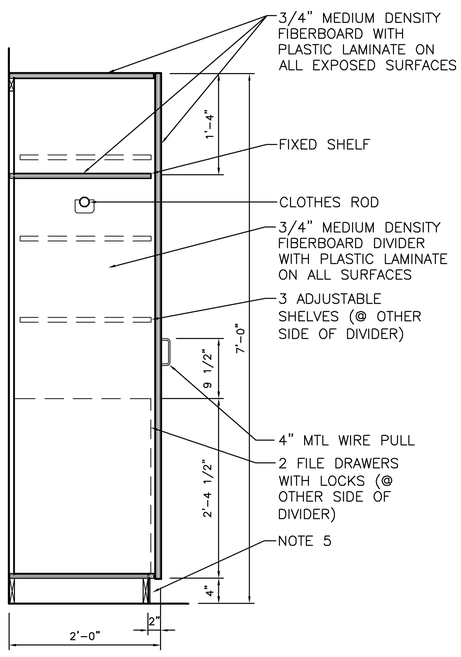

A A402 A703 A403 A405 **TEACHER CABINET**
SCALE: 1" = 1'-0"

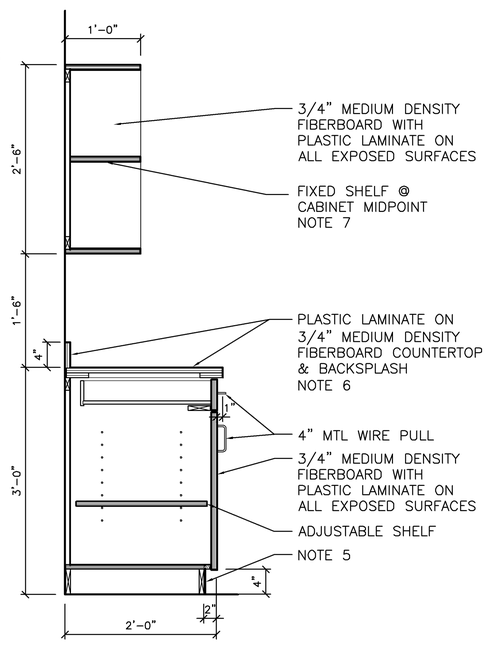

C A402 A403 A703 A404 A405 **TYP BASE/WALL CABINET**
SCALE: 1" = 1'-0"
BID ITEM: PROVIDE WOOD FINISH CABINETS AT SCIENCE LAB AND PREPARATION ROOM.

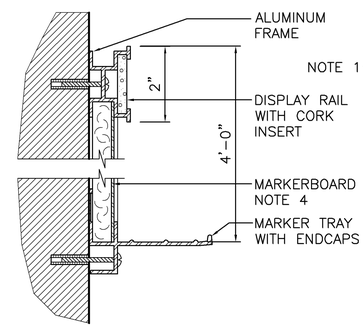

F A102 A703 A103 A104 **MARKERBOARD**
SCALE: 6" = 1'-0"

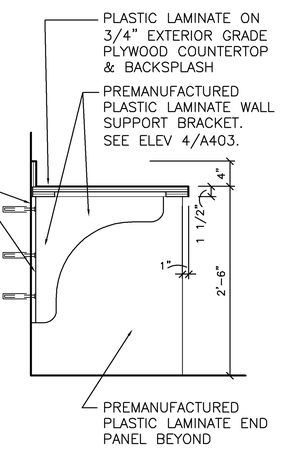

H A403 A703 **COMPUTER COUNTER**
SCALE: 1" = 1'-0"

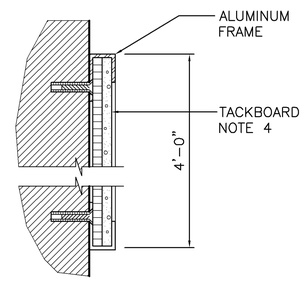

E A402 A703 A403 A404 **TACKBOARD**
SCALE: 6" = 1'-0"

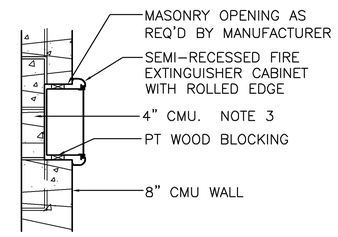

G A101 A703 **FIRE EXTINGUISHER CABINET (FEC)**
SCALE: 1" = 1'-0"

GRAPHIC SCALE

0 2' 4' 8'
1/4" = 1'-0"

0 1/2' 1' 2'
1" = 1'-0"

0 1" 2" 3" 6"
6"=1'-0"

US ARMY CORPS OF ENGINEERS SAVANNAH

SYMBOL	DESCRIPTION	DATE	BY

DATE: 25 JAN 2010
SOLICITATION NO.: W912HN-09-R-0018
CONTRACT NO.: ____
CATEGORY CODE: 730-45-01
PLOT DATE:
DESIGNED BY: SCD
DWN BY: SCD/JDA
CKD BY: SCD
SUBMITTED BY: ____
FILE NAME: ____
PLOT SCALE:
SIZE: 34x22

U. S. ARMY ENGINEER DISTRICT
CORPS OF ENGINEERS
SAVANNAH DISTRICT

LS3P ASSOCIATES LTD.
205 ½ KING STREET
CHARLESTON, SC, 29401

ALBRITTON JUNIOR HIGH SCHOOL ADDITION
FT BRAGG NORTH CAROLINA

CASEWORK, EQUIPMENT & INTERIOR SIGNAGE DETAILS

PLATE REFERENCE NUMBER
A-703
SHEET 63