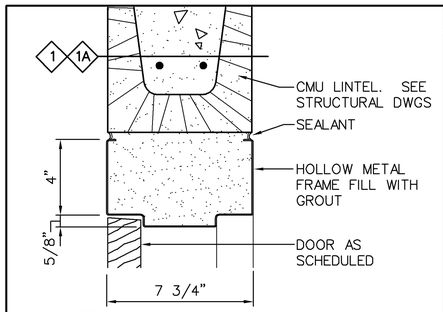

D A601 A701 INTERIOR DOOR HEAD
SCALE: 3" - 1'-0"

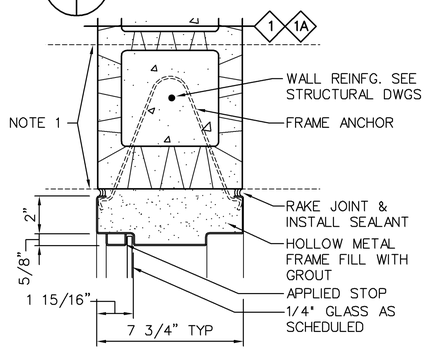

C A601 A701 INTERIOR SIDELITE JAMB
SCALE: 3" - 1'-0"

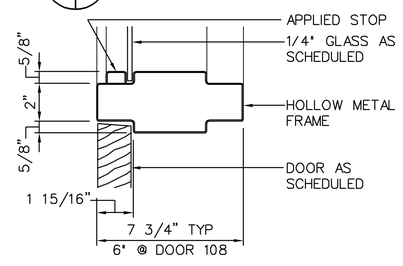

B A601 A701 INTERIOR MULLION
SCALE: 3" - 1'-0"

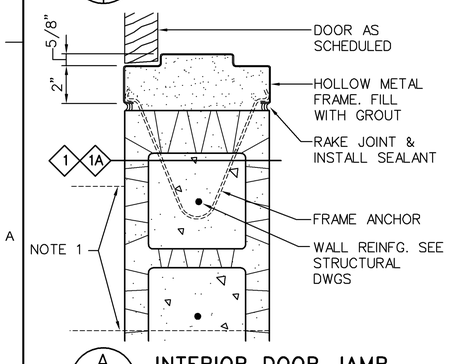

A A601 A701 INTERIOR DOOR JAMB
SCALE: 3" - 1'-0"

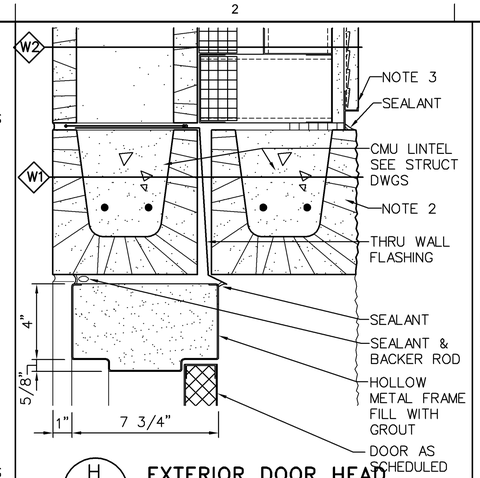

H A601 A701 EXTERIOR DOOR HEAD
SCALE: 3" - 1'-0"

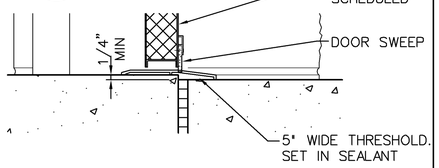

G A601 A701 EXTERIOR DOOR SILL
SCALE: 3" - 1'-0"

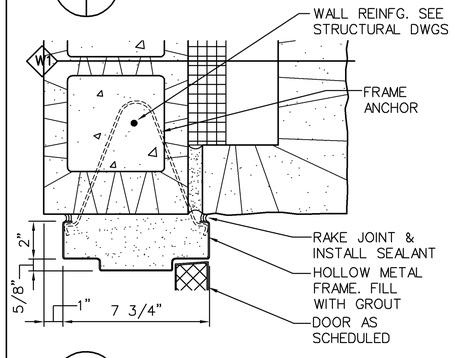

F A401 A701 A601 EXTERIOR DOOR JAMB
SCALE: 3" - 1'-0"

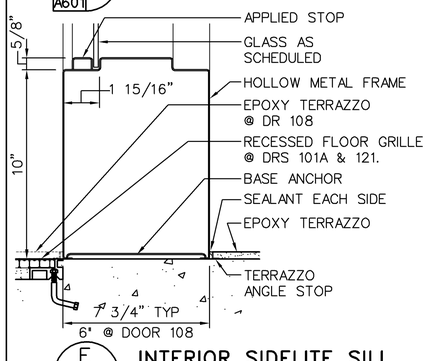

E A601 A701 INTERIOR SIDELITE SILL
SCALE: 3" - 1'-0"

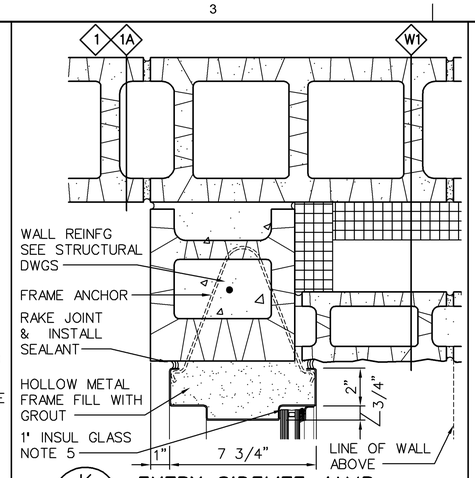

K A401 A701 A601 ENTRY SIDELITE JAMB
SCALE: 3" - 1'-0"

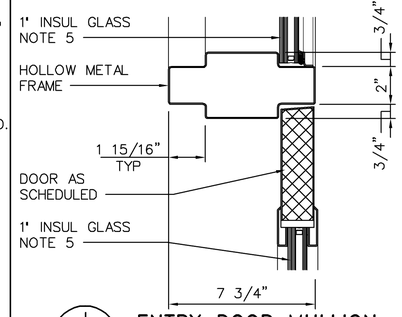

J A601 A701 ENTRY DOOR MULLION
SCALE: 3" - 1'-0"

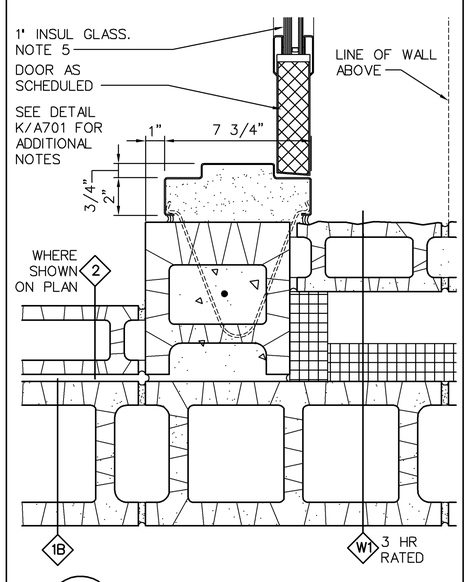

I A401 A701 A601 ENTRY DOOR JAMB
SCALE: 3" - 1'-0"

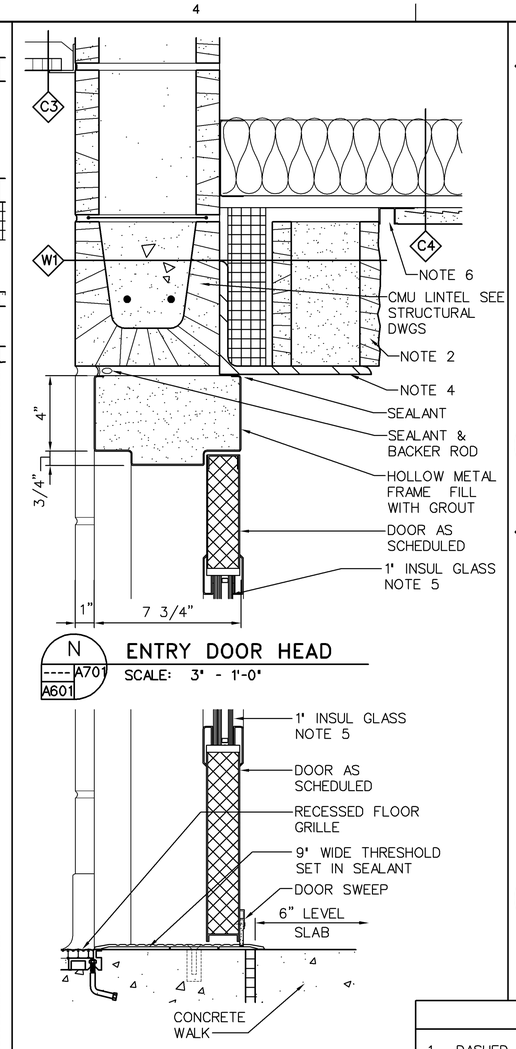

N A701 A601 ENTRY DOOR HEAD
SCALE: 3" - 1'-0"

M A301 A701 A704 ENTRY DOOR SILL
SCALE: 3" - 1'-0"

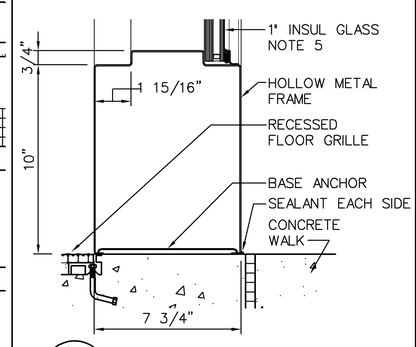

L A601 A701 ENTRY SIDELITE SILL
SCALE: 3" - 1'-0"

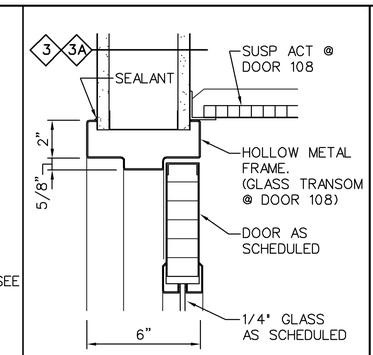

O A601 A701 INTERIOR DOOR HEAD
SCALE: 3" - 1'-0"

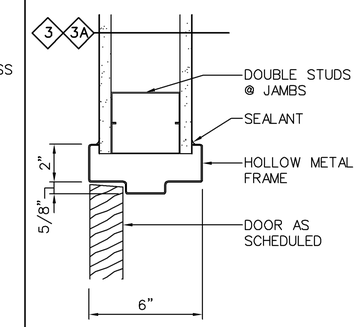

P A601 A701 INTERIOR DOOR JAMB
SCALE: 3" - 1'-0"

KEYED NOTES

1. DASHED LINES INDICATE ALTERNATE PARTITION LOCATION. SEE FLOOR PLAN.
2. 8" x 8" SCORED SPLIT FACED 6" CMU. EXTEND SCORED UNITS 8" EACH SIDE OF MASONRY OPENING.
3. 3/4" x 1 1/2" TYPE "T" METAL REVEAL MOLDING.
4. GALV STEEL LINTEL ANGLE. PAINT TO MATCH CMU. SEE STRUCTURAL DWGS FOR SIZE.
5. PROVIDE GLASS AND STOP TO MEET UFC-4-010-01 BLAST RESISTANT REQUIREMENTS.
6. 3/4" x 3/4 TYPE "F" METAL REVEAL MOLDING. TYP AT SOFFIT PERIMETER.

GRAPHIC SCALE

0 3" 6" 9"
3"=1'-0"

US ARMY CORPS OF ENGINEERS SAVANNAH

SYMBOL	DESCRIPTION	DATE	BY

DATE: 25 JAN 2010
SOLICITATION NO.: W912HN-09-R-0018
CONTRACT NO.:
CATEGORY CODE: 730-46-01
PLOT DATE:
DESIGNED BY: SCD
CKD BY: SCD
DWN BY: SCD/JDA
SUBMITTED BY:
FILE NAME:
PLOT SCALE:
SIZE: 34x22

U. S. ARMY ENGINEER DISTRICT
CORPS OF ENGINEERS
SAVANNAH DISTRICT

LS3P ASSOCIATES LTD.
205 KING STREET
CHARLESTON, SC 29401

ALBRITTON JUNIOR HIGH SCHOOL ADDITION
FT BRAGG NORTH CAROLINA

DOOR DETAILS

PLATE REFERENCE NUMBER
A-701
SHEET 60