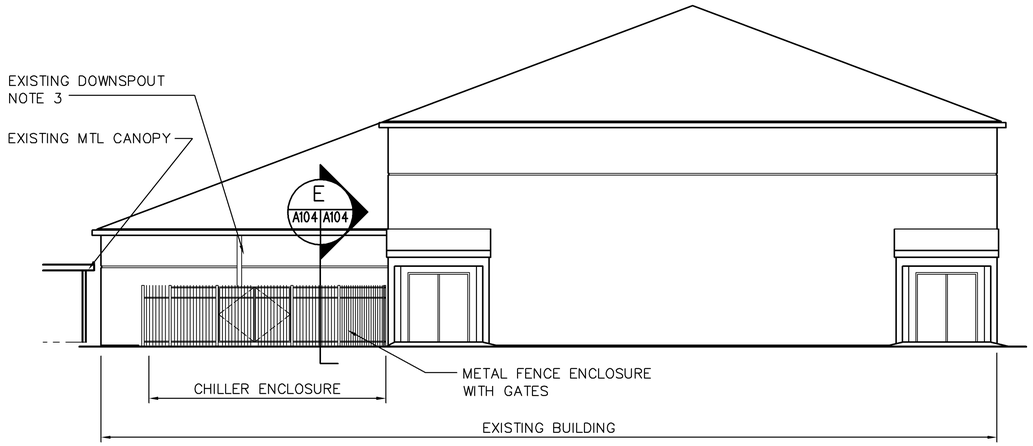

B A104 A104 CHILLER ENCLOSURE EAST ELEV
SCALE: 1/8" = 1'-0"

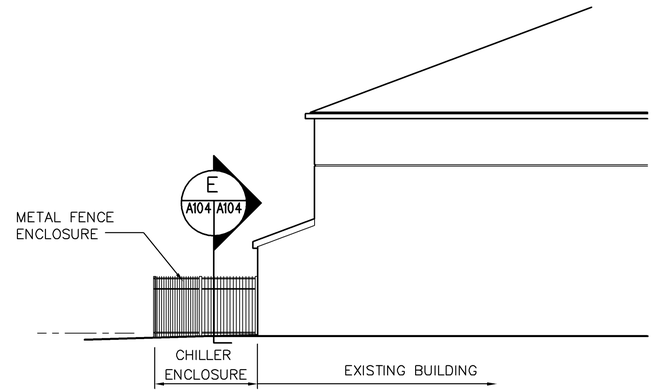

C A104 A104 CHILLER ENCLOSURE NORTH ELEV
SCALE: 1/8" = 1'-0"

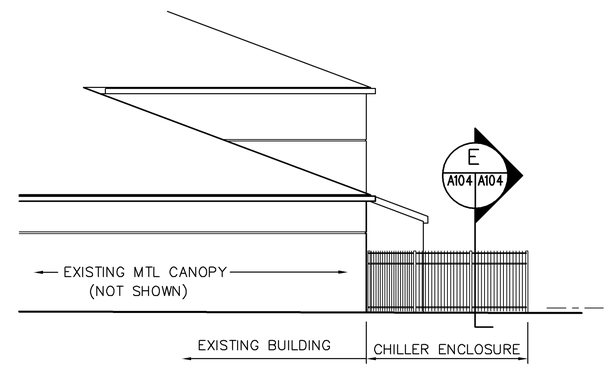

D A104 A104 CHILLER ENCLOSURE SOUTH ELEV
SCALE: 1/8" = 1'-0"

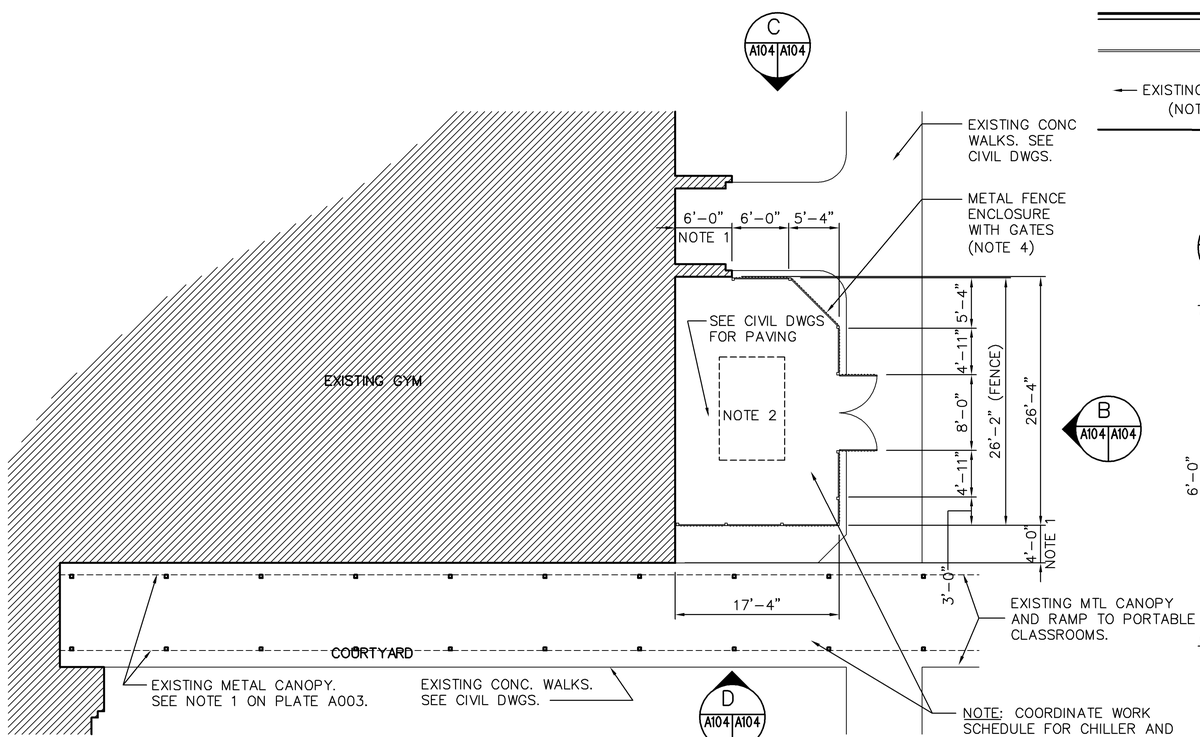

A A104 A104 CHILLER ENCLOSURE PLAN
SCALE: 1/8" = 1'-0"

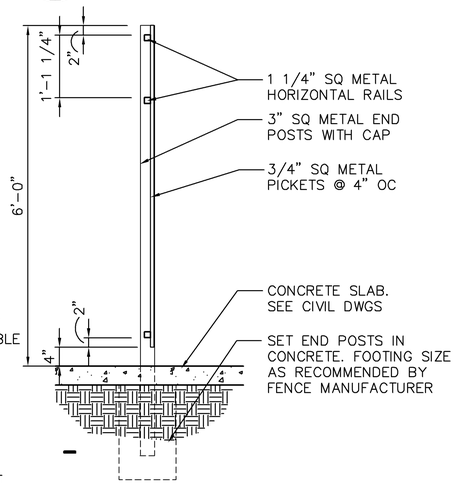

E A104 A104 CHILLER ENCLOSURE FENCE
SCALE: 3/4" = 1'-0"

GENERAL NOTES

A. ALL DIMENSIONS ARE TAKEN TO FACE OF MASONRY, FACE OF EXISTING BUILDING OR CENTERLINE OF FENCE POSTS, UNLESS NOTED OTHERWISE.

KEYED NOTES

1. VERIFY DIMENSION WITH EXISTING BUILDING AND ADJUST ACCORDINGLY.
2. CHILLER. SEE MECH DWGS FOR LOCATION & CONCRETE EQUIPMENT PAD.
3. RECONNECT TO EXISITNG STORM SEWER SYSTEM. SEE CIVIL DRAWINGS.
4. PROVIDE 3 HINGES PER GATE AND HAST LOCK AND 1 DROP BOLT HARDWARE.

KEY PLAN

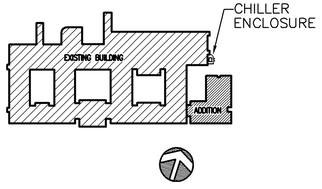

GRAPHIC SCALE

0 1' 2' 3'
3/4" = 1'-0"

0 4' 8' 16'
1/8" = 1'-0"

US ARMY CORPS
OF ENGINEERS
SAVANNAH

SYMBOL	DESCRIPTION	DATE	BY

DESIGNED BY: SCD
DWN BY: SCD
CKD BY: SCD
SCD/JDA
SUBMITTED BY:
FILE NAME:
SIZE: 34x22
PLOT SCALE:
PLOT DATE:
DATE: 25 JAN 2010
SOLICITATION NO.: W912HN-09-R-0018
CONTRACT NO.:
CATEGORY CODE: 730-46-01

U. S. ARMY ENGINEER DISTRICT
CORPS OF ENGINEERS
SAVANNAH DISTRICT

LS3P ASSOCIATES LTD.
2054 KING STREET
CHARLESTON, SC. 29401

ALBRITTON JUNIOR HIGH SCHOOL ADDITION
FT BRAGG NORTH CAROLINA

CHILLER ENCLOSURE PLAN & ELEVATIONS

PLATE REFERENCE NUMBER
A-104
SHEET 44