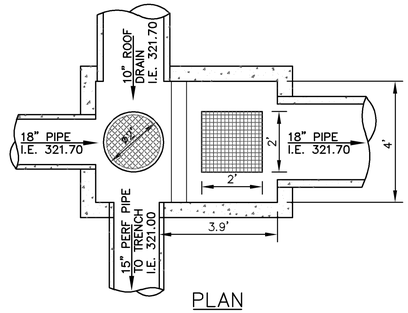

PLAN

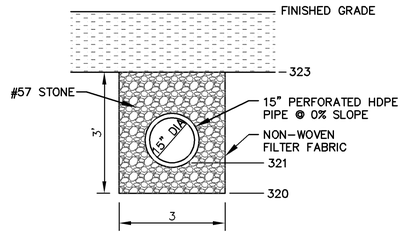

EXFILTRATION TRENCH A3
100 LF

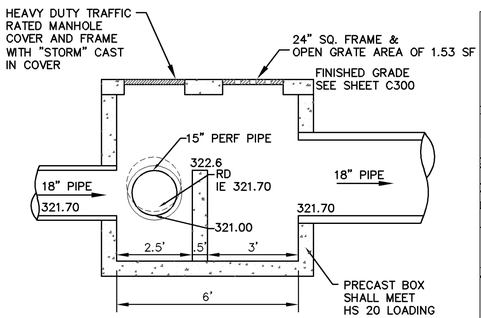

SECTION

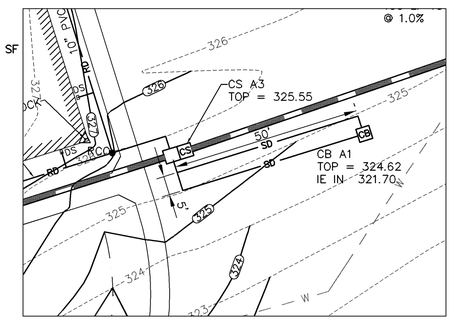

SCALE: 1" = 20'
PLAN

(A) EXFILTRATION TRENCH W/ CONTROL STRUCTURE DETAIL
N.T.S.

NOTES:
1. USE SPIDER SUPPORTS (SEE DETAIL) TO MOVE CARRIER PIPE INTO CASING PIPE. SPACING OF SPIDERS WILL BE DICTATED BY THE LENGTH OF CASING PIPE AND NUMBER OF JOINTS OF CARRIER PIPE.
2. MINIMUM OF 2 SPACERS PER JOINT OF PIPE.
3. THERE SHALL BE NO CASING WELDS UNDER THE BUILDING.

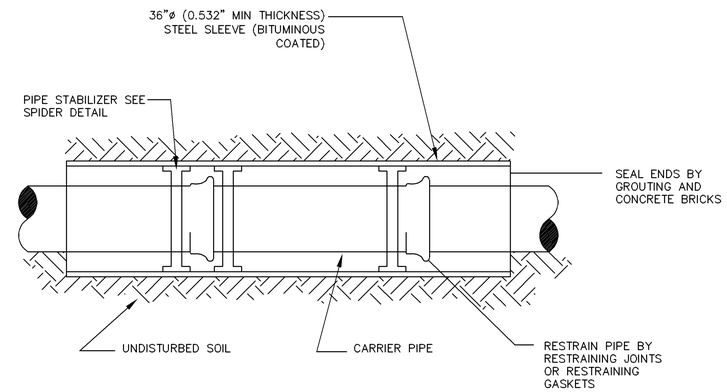

CASING PIPE PROFILE

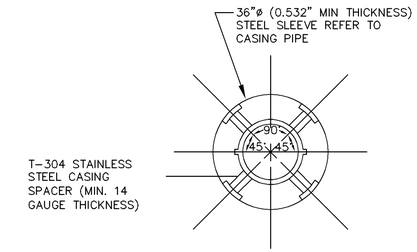

SPIDER DETAIL

(C) STEEL CASING DETAIL
N.T.S.

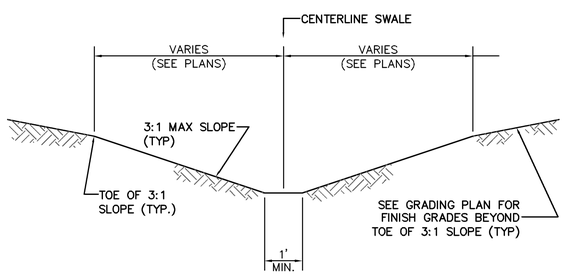

(B) TYPICAL SWALE SECTION
NOT TO SCALE

NORTH CAROLINA PROFESSIONAL SEAL 027779 ENGINEER LAWRENCE K. BARTHELEMY, IV

US ARMY CORPS OF ENGINEERS SAVANNAH

SYMBOL	DESCRIPTION	DATE	BY

DESIGNED BY: JJBG | DATE: 25 JAN 2010
DWN BY: JDG | CKD BY: LKB | SOLICITATION NO.: W912HN-09-R-0018
SUBMITTED BY: LKB | CONTRACT NO.:
FILE NAME: BRNC-630.DWG | CATEGORY CODE: 730-46-01
SIZE: 34x22 | PLOT SCALE: NOT TO SCALE | PLOT DATE:

U. S. ARMY ENGINEER DISTRICT CORPS OF ENGINEERS SAVANNAH DISTRICT

LS3P ASSOCIATES LTD. 205 ½ KING STREET CHARLESTON, SC. 29401

ALBRITTON JUNIOR HIGH SCHOOL ADDITION
FT BRAGG NORTH CAROLINA

CIVIL DETAILS
STORM DRAINAGE

PLATE REFERENCE NUMBER
C-631
SHEET 19