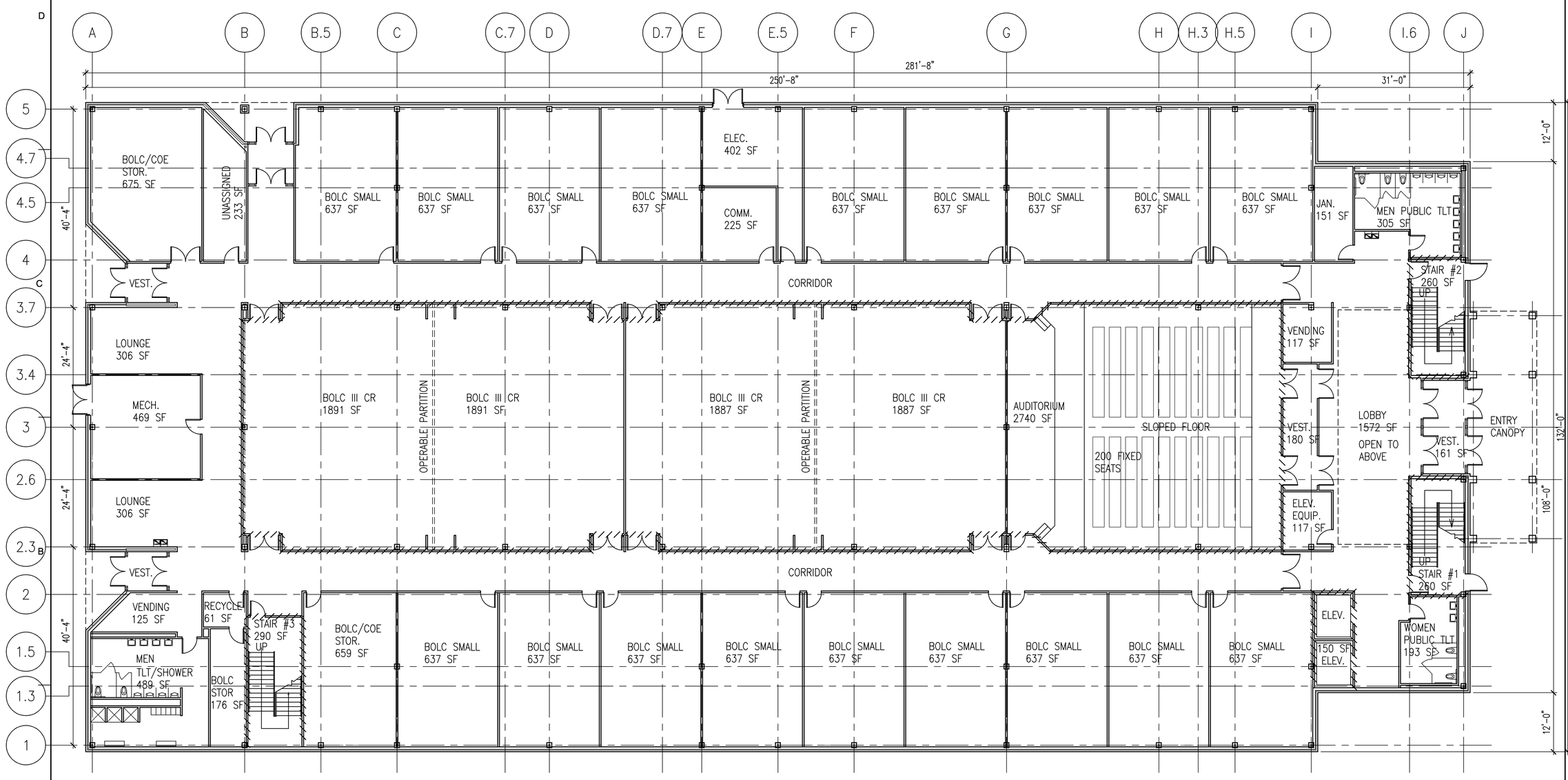

INDICATES LOCATION OF 1 HR. RATED FIRE WALLS.

GROUND FLOOR PLAN

SCALE: 3/32" = 1'-0"

0 10' 20' 30'
GRAPHIC SCALE 3/32"=1'-0"

NORTH

NOT FOR CONSTRUCTION

SHERLOCK SMITH & ADAMS
ARCHITECTS / ENGINEERS
3947 CARTER HILL ROAD
P.O. DRAWER 11006
MONTGOMERY, AL 36111-0006
tel. 334.263.5481 fax. 334.264.4509

KCI Associates of North Carolina, PA
Engineers • Planners • Scientists • Construction Managers
4601 Six Forks Road, Landmark Center II, Suite 220
Raleigh, NC 27609-5210
Phone (919) 783-9214
Fax (919) 783-9266
http://www.kci.com

US ARMY CORPS OF ENGINEERS SAVANNAH

SYMBOL	DESCRIPTION	DATE	BY

DATE: 3 JULY 2008
SOLICITATION NO.: W912DR-08-R-0024
CONTRACT NO.: XX
CATEGORY CODE: XX
PLOT DATE: 3 JULY 2008
DESIGNED BY: XX
DWN BY: XX
CKD BY: XX
SUBMITTED BY: XX
FILE NAME:
SIZE:
PLOT SCALE:

U. S. ARMY ENGINEER DISTRICT
CORPS OF ENGINEERS
SAVANNAH DISTRICT

MILITARY & FEDERAL

16th CAV Regt. General Instruction Building

GROUND FLOOR COMPOSITE PLAN

PLATE REFERENCE NUMBER
A-101
SHEET

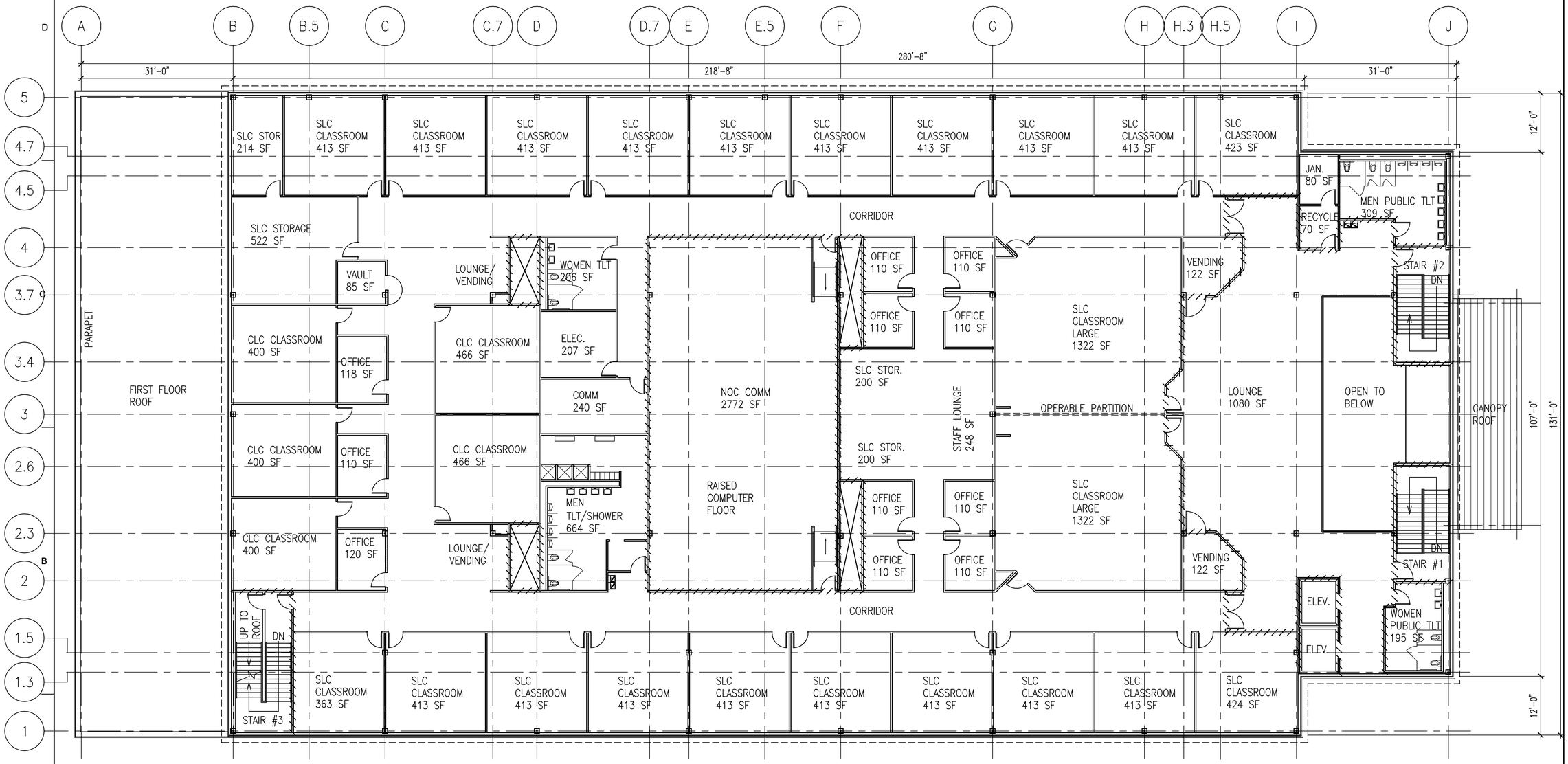

2ND FLOOR PLAN

SCALE: 3/32" = 1'-0"

INDICATES LOCATION OF 1 HR. RATED FIRE WALLS.

NORTH

0 10' 20' 30'

GRAPHIC SCALE 3/32"=1'-0"

NOT FOR CONSTRUCTION

US ARMY CORPS OF ENGINEERS SAVANNAH

SYMBOL	DESCRIPTION	DATE	BY

DATE: 3 JULY 2008
SOLICITATION NO.: W912EB-08-R-0024
CONTRACT NO.: XX
CATEGORY CODE: XX
PLOT DATE: 3 JULY 2008
PLOT SCALE:

DESIGNED BY: XX
DWN BY: XX
CKD BY: XX
SUBMITTED BY: XX
FILE NAME:
SIZE:

U. S. ARMY ENGINEER DISTRICT
CORPS OF ENGINEERS
SAVANNAH DISTRICT

MILITARY & FEDERAL

16th CAV Regt. General Instruction Building

2ND FLOOR COMPOSITE PLAN

PLATE REFERENCE NUMBER
A–102
SHEET

SHERLOCK SMITH & ADAMS
ARCHITECTS / ENGINEERS
3047 CARTER HILL ROAD
P.O. DRAWER 11006
MONTGOMERY, AL 36111-0006
tel. 334.263.6481 fax. 334.264.4509

KCI Associates of North Carolina, PA
Engineers • Planners • Scientists • Construction Managers
4601 Six Forks Road, Landmark Center II, Suite 220
Raleigh, NC 27609-5210
Phone (919) 783-9214
Fax (919) 783-9266
http://www.kci.com

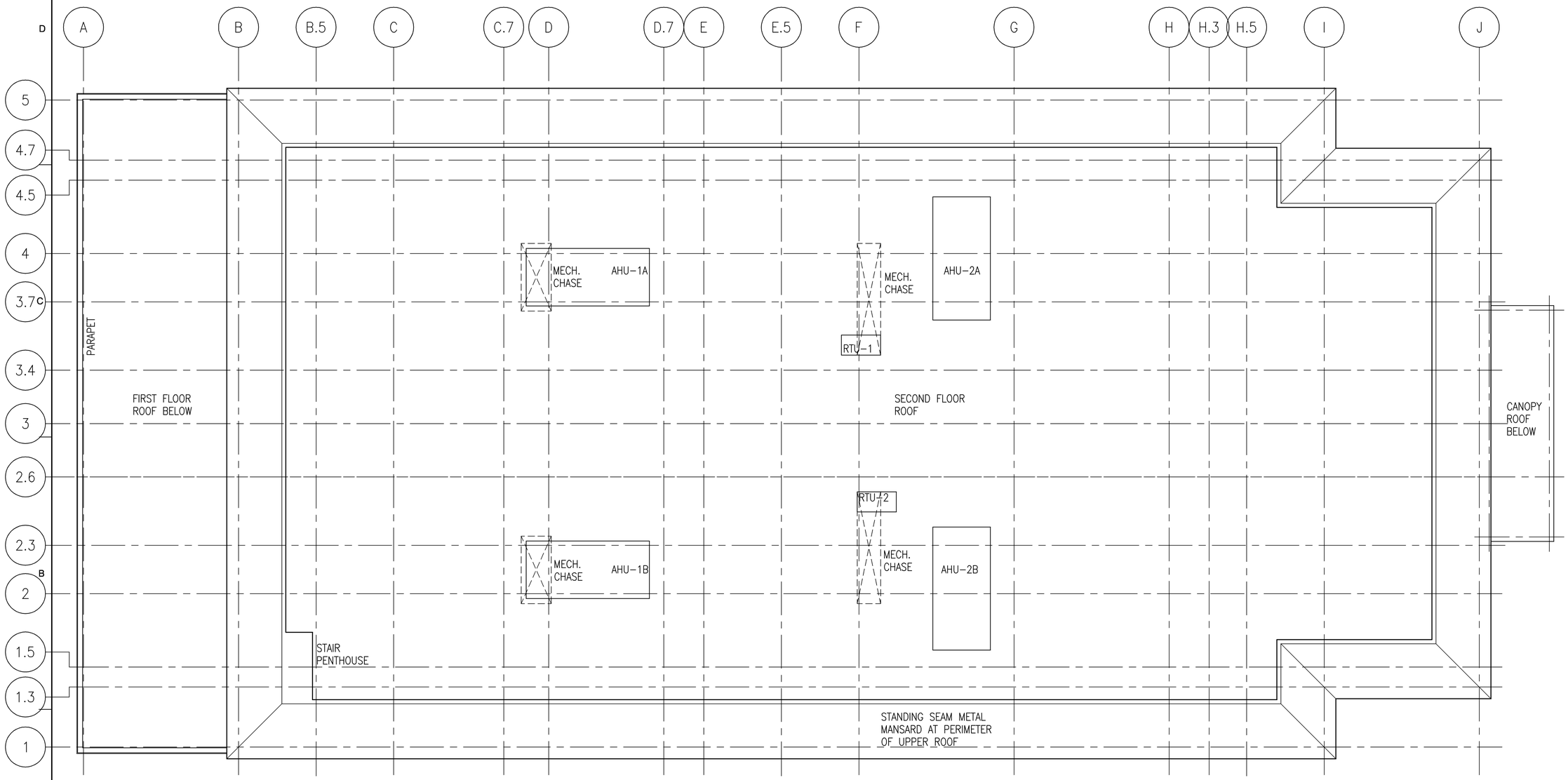

ROOF PLAN

SCALE: 3/32" = 1'-0"

NOT FOR CONSTRUCTION

SHERLOCK
SMITH & ADAMS
ARCHITECTS / ENGINEERS
3047 CARTER HILL ROAD
P.O. DRAWER 11006
MONTGOMERY, AL 36111-0006
tel. 334.263.6481 fax. 334.264.4509

KCI Associates of North Carolina, PA
Engineers • Planners • Scientists • Construction Managers
[redacted]
Phone (919) 783-9214
Fax (919) 783-9266
http://www.kci.com
KCI ASSOCIATES OF NORTH CAROLINA, PA

GRAPHIC SCALE: 3/32"=1'-0"

US ARMY CORPS
OF ENGINEERS
SAVANNAH

SYMBOL	DESCRIPTION	DATE	BY

DESIGNED BY: xx
DWN BY: xx
CKD BY: xx
SUBMITTED BY: xx
FILE NAME:
SIZE:
PLOT SCALE:
DATE: 3 JULY 2008
SOLICITATION NO.: W912DR-08-R-0024
CONTRACT NO.: XX
CATEGORY CODE: XX
PLOT DATE: 3 JULY 2008

U. S. ARMY ENGINEER DISTRICT
CORPS OF ENGINEERS
SAVANNAH DISTRICT

MILITARY & FEDERAL

16th CAV Regt. General Instruction Building

ROOF PLAN

PLATE
REFERENCE
NUMBER
A-103
SHEET

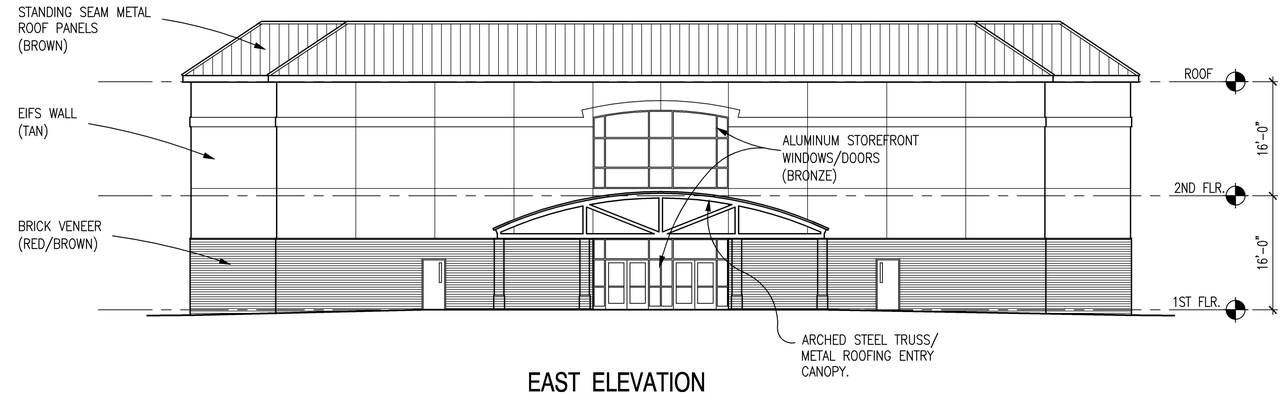

EAST ELEVATION

SCALE: 3/32" = 1'-0"

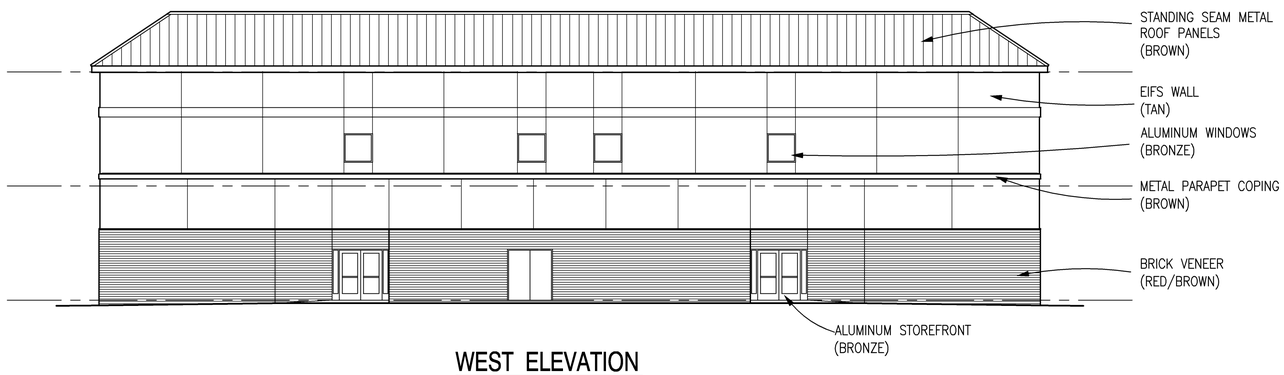

WEST ELEVATION

SCALE: 3/32" = 1'-0"

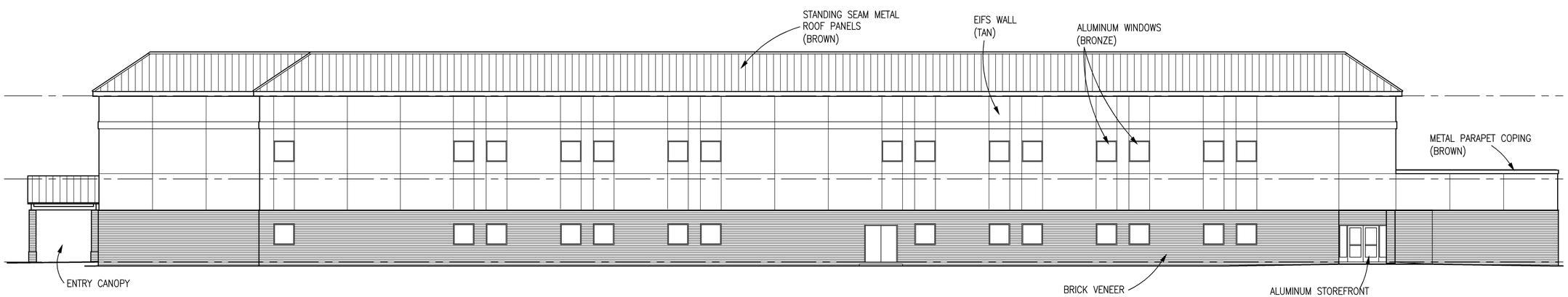

NORTH ELEVATION

SCALE: 3/32" = 1'-0" (SOUTH ELEVATION SIMILAR)

SHERLOCK SMITH & ADAMS
ARCHITECTS / ENGINEERS
3047 CARTER HILL ROAD
P.O. DRAWER 11008
MONTGOMERY, AL 36111-0006
tel. 334.263.5481 fax. 334.264.4509

0 10' 20' 30'
GRAPHIC SCALE 3/32"=1'-0"

NOT FOR CONSTRUCTION

KCI Associates of North Carolina, PA
Engineers • Planners • Scientists • Construction Managers
4601 Six Forks Road, Landmark Center II, Suite 220
Raleigh, NC 27609-5210
Phone (919) 783-9214
Fax (919) 783-9266
http://www.kci.com

US ARMY CORPS OF ENGINEERS SAVANNAH

SYMBOL	DESCRIPTION	DATE	BY

DESIGNED BY: XX | CKD BY: XX | DATE: 3 JULY 2008
DWN BY: XX | SOLICITATION NO.: W912DR-08-R-0024
SUBMITTED BY: XX | CONTRACT NO.: XX
FILE NAME: | CATEGORY CODE: XX
SIZE: | PLOT SCALE: | PLOT DATE: 3 JULY 2008

U. S. ARMY ENGINEER DISTRICT
CORPS OF ENGINEERS
SAVANNAH DISTRICT

MILITARY & FEDERAL

16th CAV Regt. General Instruction Building

EXTERIOR ELEVATIONS

PLATE REFERENCE NUMBER
A-104
SHEET

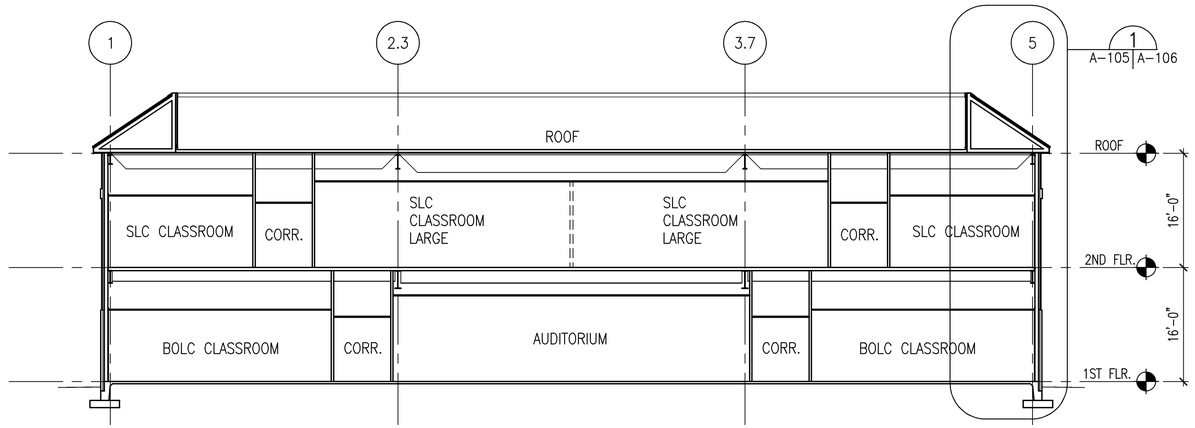

BUILDING CROSS SECTION

SCALE: 3/32" = 1'-0"

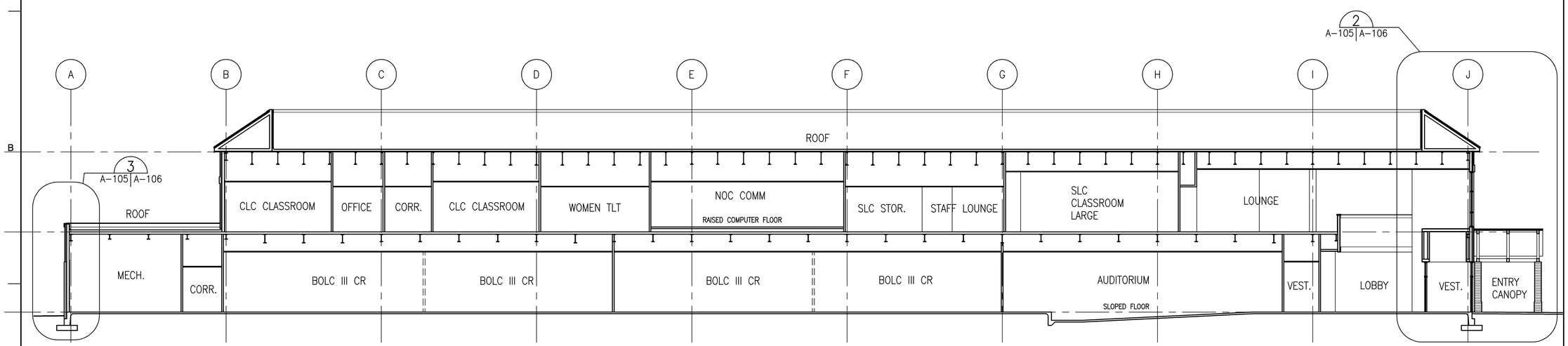

BUILDING LONGITUDINAL SECTION

SCALE: 3/32" = 1'-0"

0 10' 20' 30'

GRAPHIC SCALE 3/32"=1'-0"

NOT FOR CONSTRUCTION

SHERLOCK SMITH & ADAMS
ARCHITECTS / ENGINEERS
3047 CARTER HILL ROAD
P.O. DRAWER 11006
MONTGOMERY, AL 36111-0006
tel. 334.263.5481 fax. 334.264.4509

KCI Associates of North Carolina, PA
Engineers • Planners • Scientists • Construction Managers
4601 Six Forks Road, Landmark Center II, Suite 220
Raleigh, NC 27609-5210
Phone (919) 783-9214
Fax (919) 783-9266
http://www.kci.com
KCI ASSOCIATES OF NORTH CAROLINA, PA

US ARMY CORPS OF ENGINEERS SAVANNAH

SYMBOL	DESCRIPTION	DATE	BY

DESIGNED BY: XX
DWN BY: XX
CKD BY: XX
SUBMITTED BY: XX
FILE NAME:
SIZE:
PLOT SCALE:
DATE: 3 JULY 2008
SOLICITATION NO.: W912B4-08-R-0024
CONTRACT NO.: XX
CATEGORY CODE: XX
PLOT DATE: 3 JULY 2008

U. S. ARMY ENGINEER DISTRICT
CORPS OF ENGINEERS
SAVANNAH DISTRICT

MILITARY & FEDERAL

16th CAV Regt. General Instruction Building

BUILDING SECTIONS

PLATE REFERENCE NUMBER
A-105
SHEET

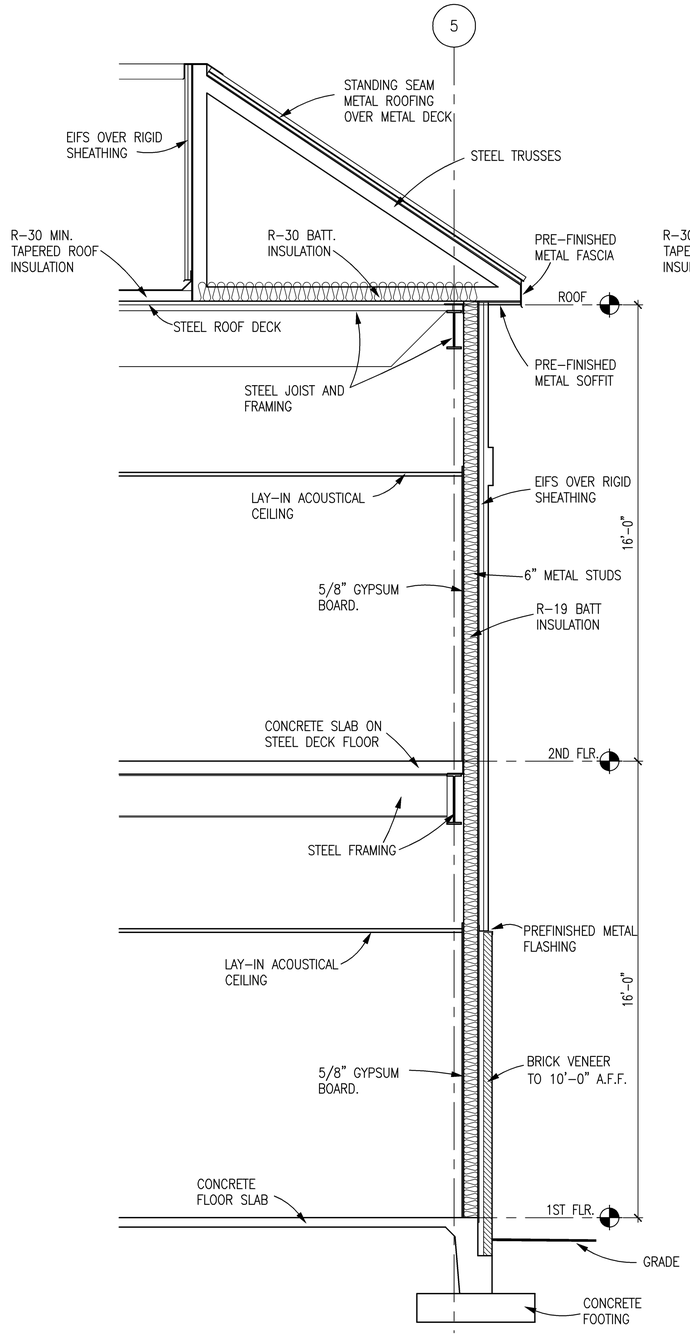

WALL SECTION 1
SCALE: 3/8" = 1'-0"
A-105 | A-106

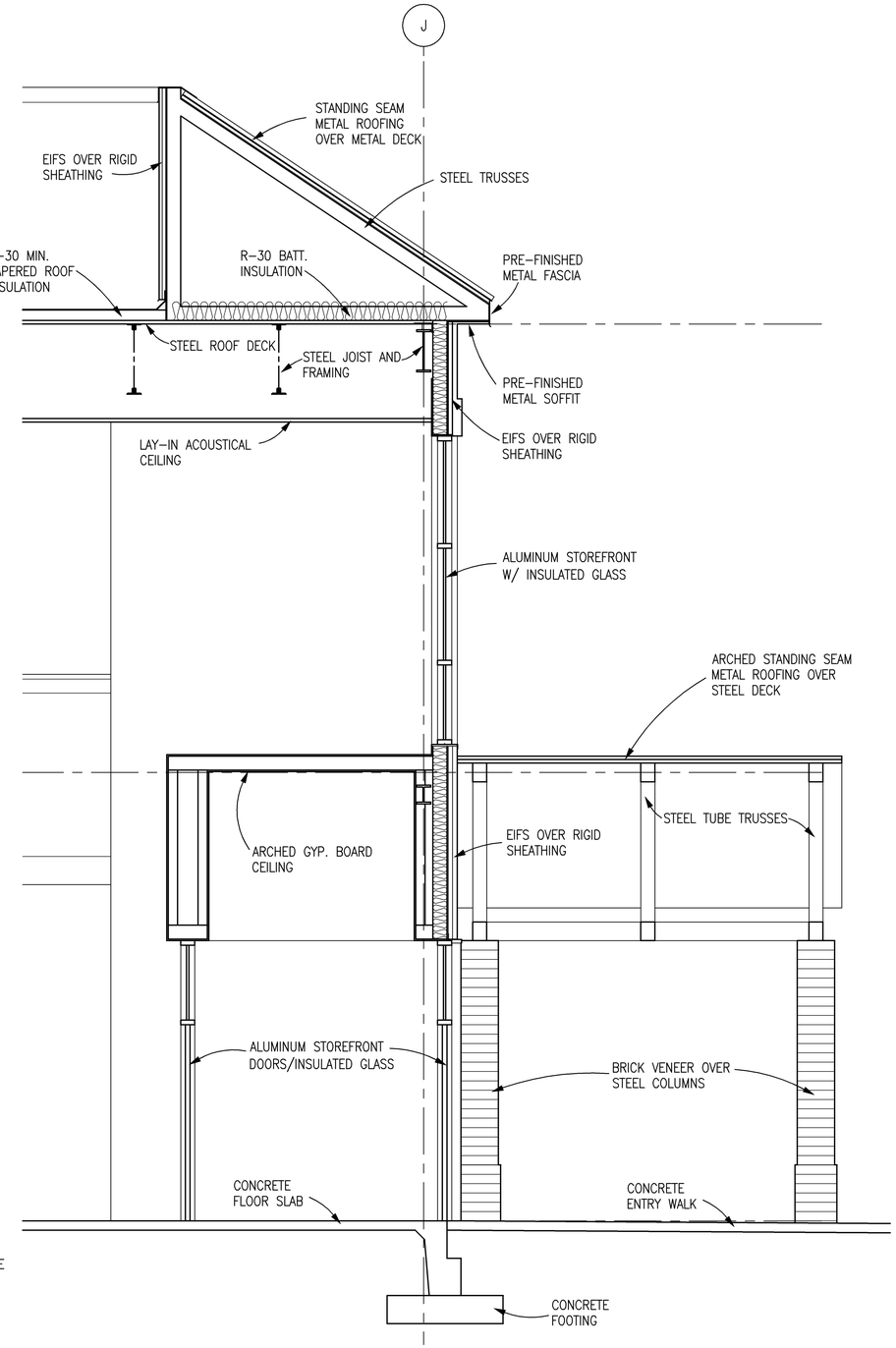

WALL SECTION 2
SCALE: 3/8" = 1'-0"
A-105 | A-106

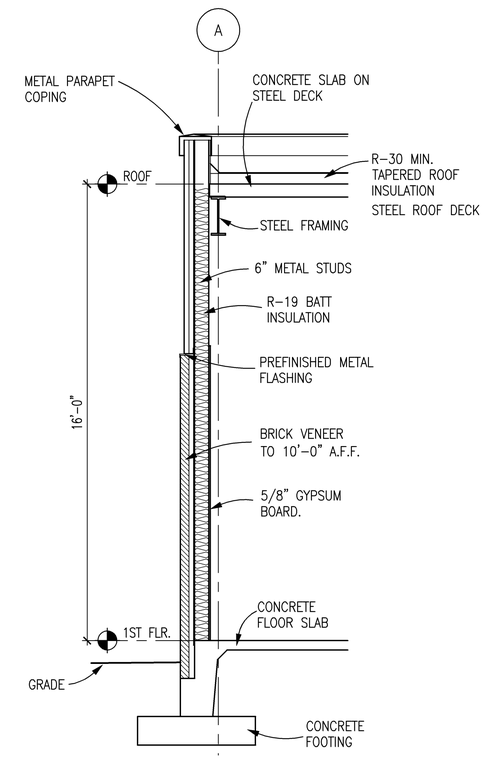

WALL SECTION 3
SCALE: 3/8" = 1'-0"
A-105 | A-106

0 1' 2' 3' 4' 5' 6' 7' 8'
GRAPHIC SCALE 3/8"=1'-0"

NOT FOR CONSTRUCTION

SHERLOCK SMITH & ADAMS
ARCHITECTS / ENGINEERS
3047 CARTER HILL ROAD
P.O. DRAWER 11006
MONTGOMERY, AL 36111-0006
tel. 334.263.6481 fax. 334.264.4509

KCI Associates of North Carolina, PA
Engineers • Planners • Scientists • Construction Managers
4601 Six Forks Road, Landmark Center II, Suite 220
Raleigh, NC 27609-5210
Phone (919) 783-9214
Fax (919) 783-9266
http://www.kci.com

US ARMY CORPS OF ENGINEERS SAVANNAH

SYMBOL	DESCRIPTION	DATE	BY

DESIGNED BY: xx
DWN BY: xx
CKD BY: xx
SUBMITTED BY: xx
FILE NAME:
SIZE:
PLOT SCALE:
DATE: 3 JULY 2008
SOLICITATION NO.: W912DB-09-R-0024
CONTRACT NO.: XX
CATEGORY CODE: XX
PLOT DATE: 3 JULY 2008

U. S. ARMY ENGINEER DISTRICT
CORPS OF ENGINEERS
SAVANNAH DISTRICT

MILITARY & FEDERAL

16th CAV Regt. General Instruction Building

WALL SECTIONS

PLATE REFERENCE NUMBER
A-106
SHEET